ASSEMBLY INSTRUCTION **model HARMONY A**

1. -2 Pcs.	2. -2 Pcs.	3. -2 Pcs.	4. -1 Pc.	5. -2 Pcs.	6. -2 Pcs.	7. -1 Pc.
8. -2 Pcs.	9. -1 Pc.					

A. -8 Pcs.	B. -4 Pcs.	C. -1 Pc.	D. -12 Pcs.	E. -12 Pcs.	F. -12 Pcs.
G. -4 Pcs.	H. -4 Pcs.	I. -8 Pcs.	J. -2 Pcs.		

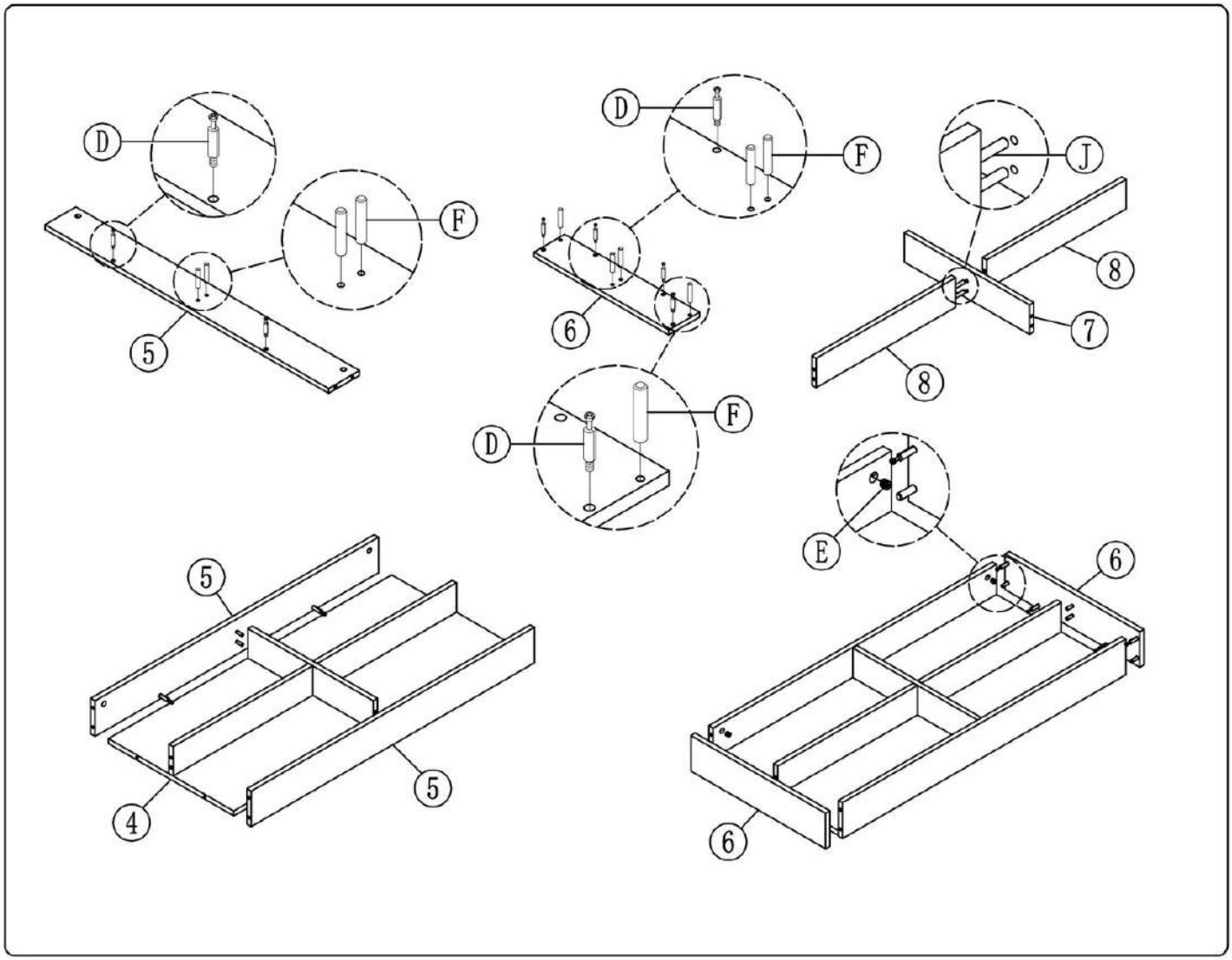

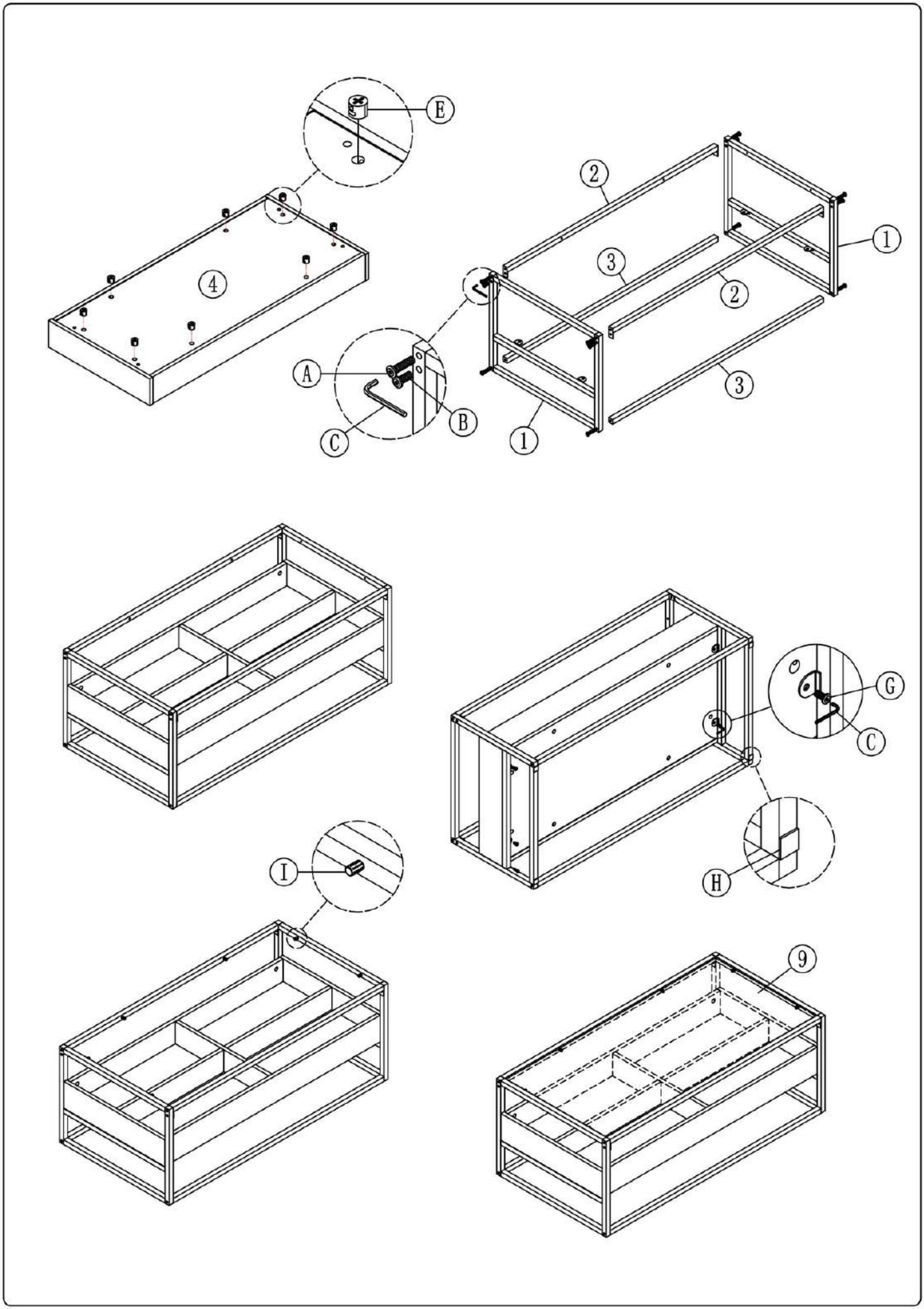
E
4
2
1
3
2
3
1
A
B
C
G
C
H
I
9