# SMYK/SMYK II/SMYK III

## REGAŁ 80 3S1D – 05

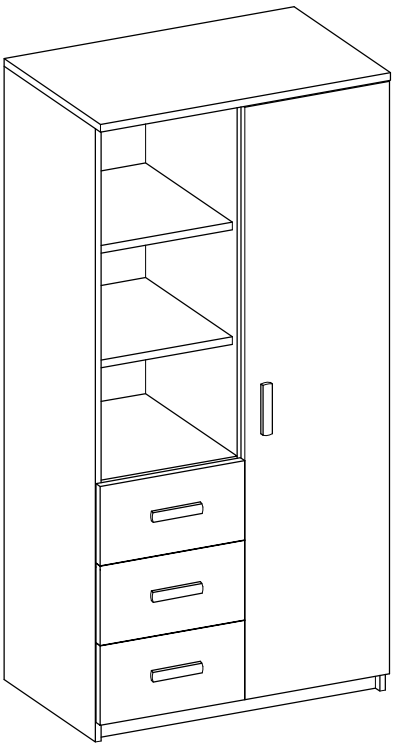

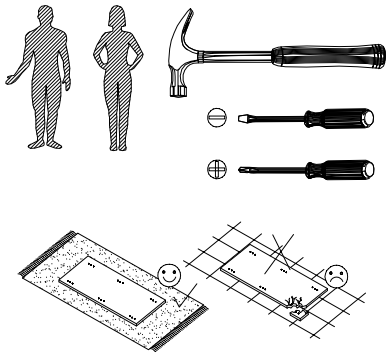

| # | ART. NR | QUANTITY |
|---|---|---|
| 1 | 401 | 1 |
| 2 | 402 | 1 |
| 3 | 403 | 1 |
| 4 | 101 | 1 |
| 5 | 102 | 1 |
| 6 | 201 | 1 |
| 7 | 001 | 2 |
| 8 | 801 | 1 |
| 9 | 701 | 3 |
| 10 | 301 | 6 |
| 11 | 305 | 3 |
| 12 | 050 | 3 |
| 13 | 501 | 5 |
| 14 | 601 | 1 |

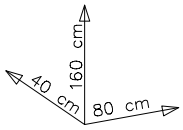


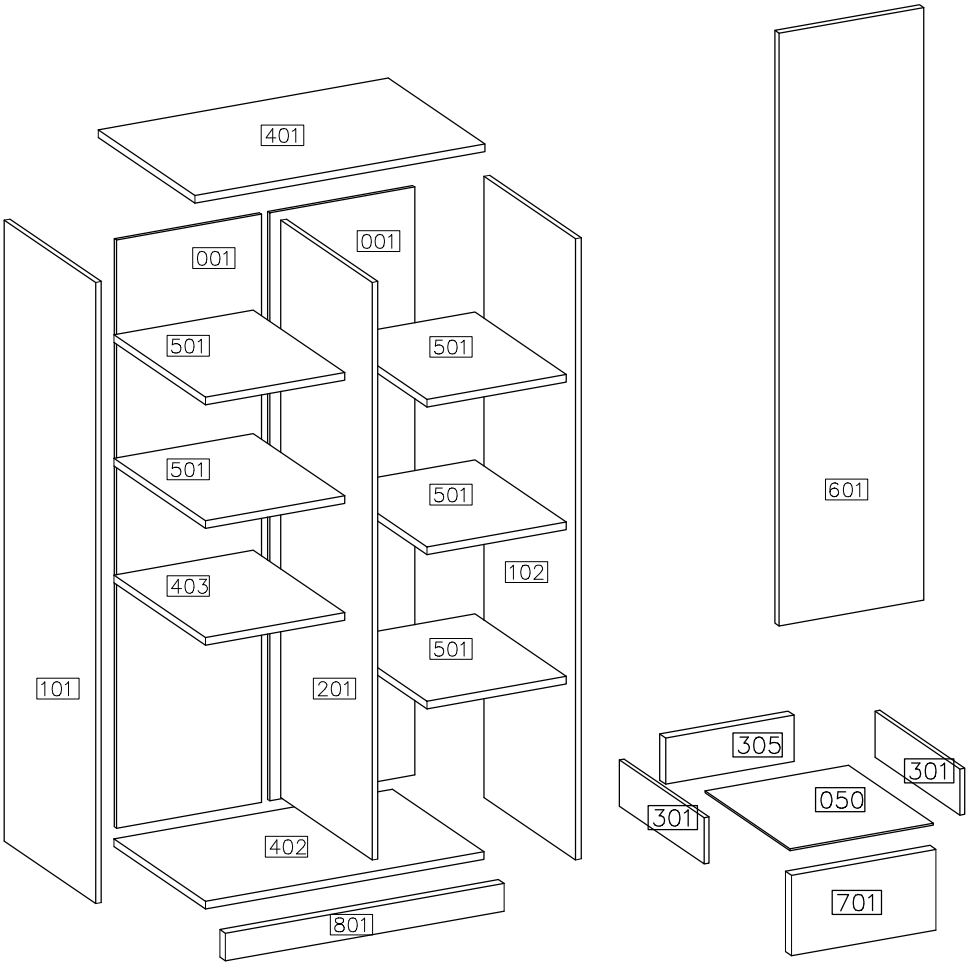


| ø8x30mm | | ø15/12mm | | | 3.5x13mm | ø4.0x16mm | H=0 | ø35/KR-0 |
|---|---|---|---|---|---|---|---|---|
| A | D1 | C | E | F9 | P2 | P1 | H4 | G6 |
| 44 | 16 | 16 | 16 | 4 | 12 | 18 | 3 | 3 |

| | | 4.0x42mm | | L-350 | | |
|---|---|---|---|---|---|---|
| F10 | F8 | R2 | S1 | PR | J4 | O11 |
| 80 | 10 | 8 | 4 | 3KPL | 20 | 1 |

1

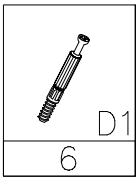


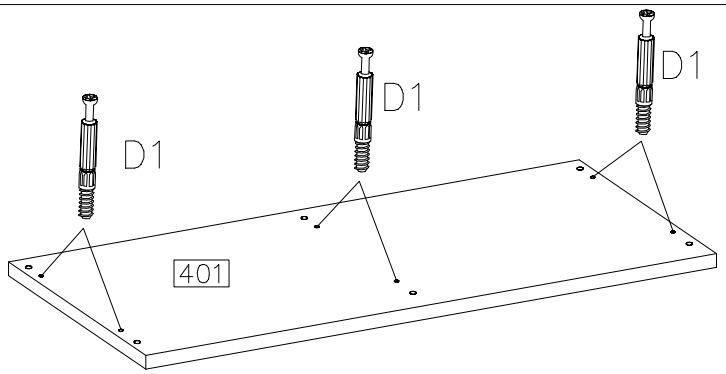


2

| ø8x30mm | ø15/12mm | |
|---|---|---|
| A | C | D1 |
| 12 | 8 | 2 |

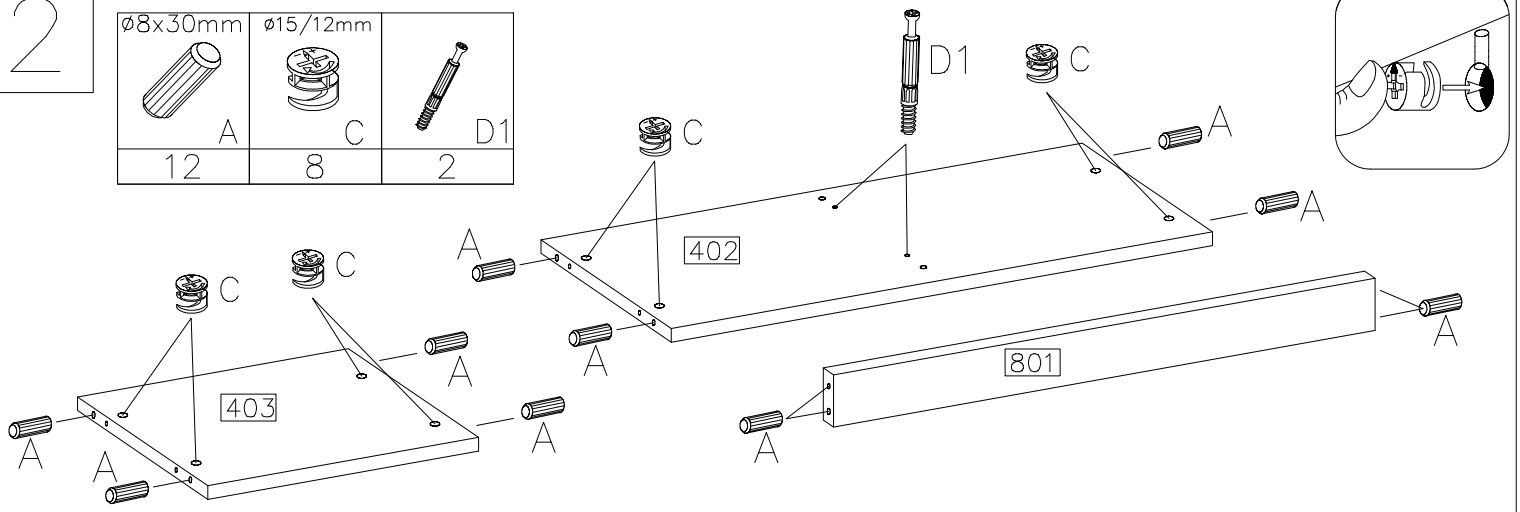


3

| ø8x30mm | L−350 |
|---|---|
| A | PR |
| 4 | 3KPL |
| F9 | 3.5x13mm P2 |
| 4 | 6 |
| ø15/12mm C | J4 |
| 4 | 10 |
| D1 | H=0 H4 |
| 6 | 3 |

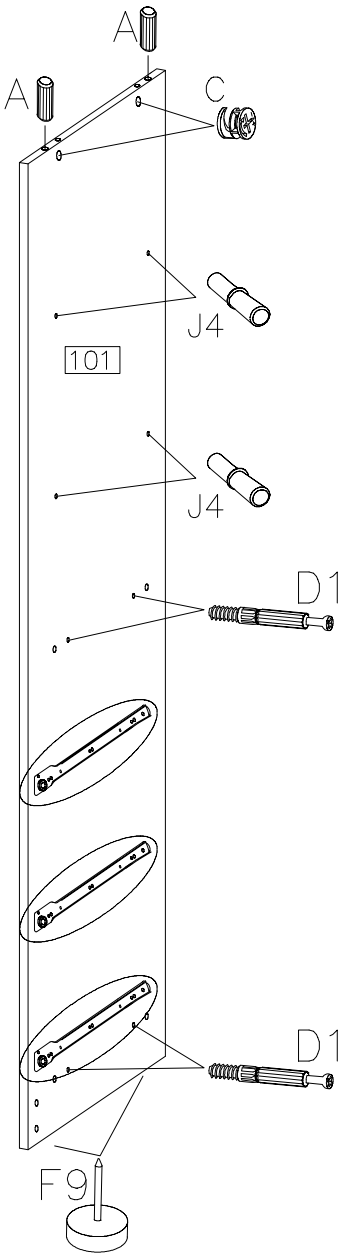


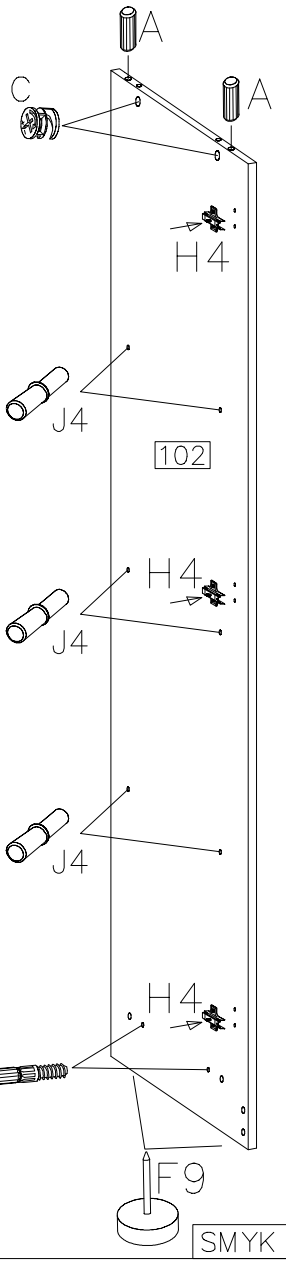


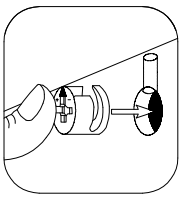

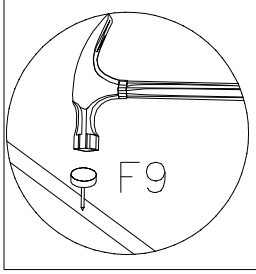


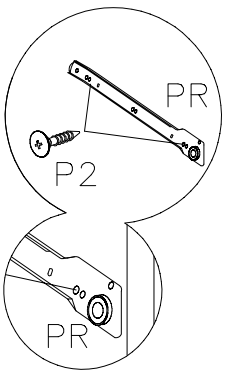


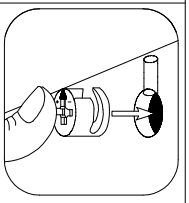

## 4

| | |
|---|---|
| ø8x30mm A | L–350 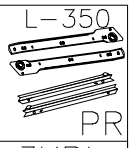 PR |
| 4 | 3KPL |
| D1 | 3.5x13mm P2 |
| 2 | 6 |
| ø15/12mm C | J4 |
| 4 | 10 |

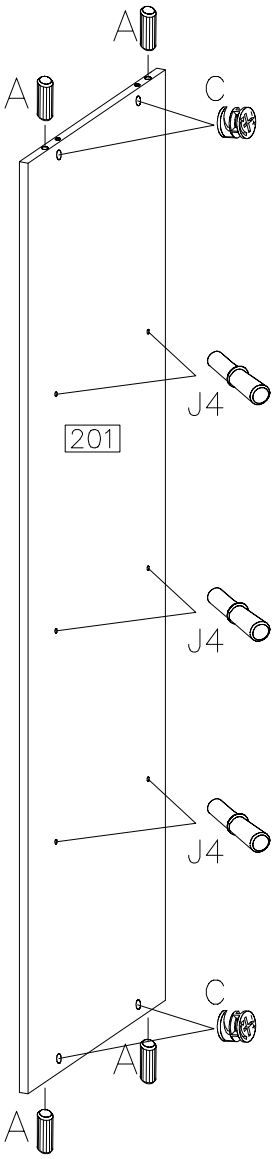


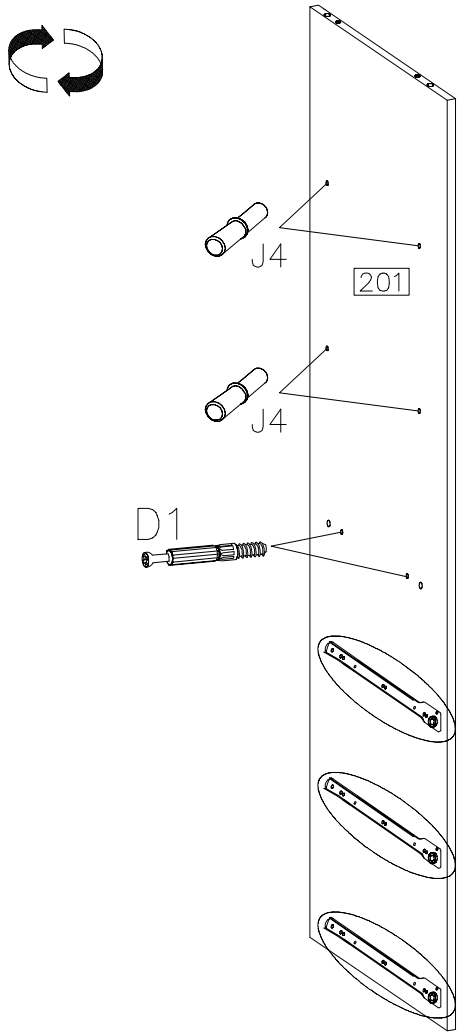


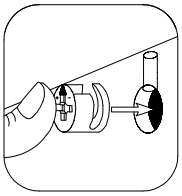

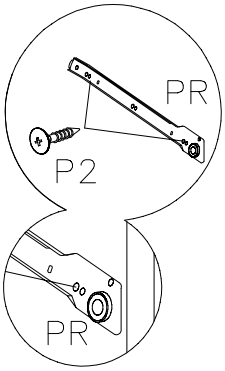


## 5

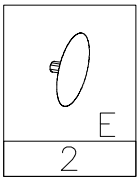


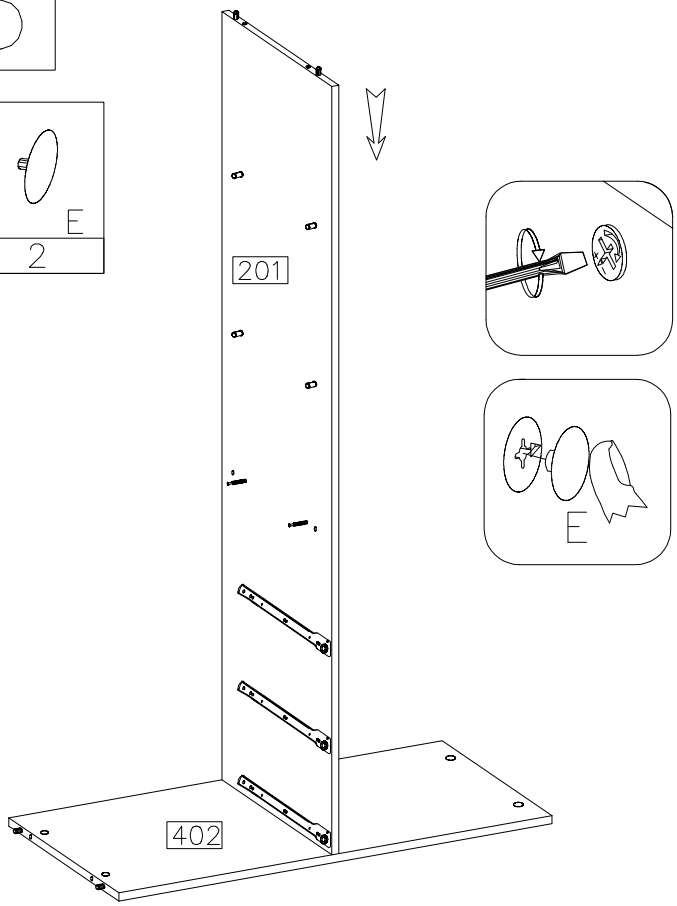







## 6

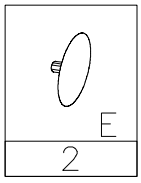


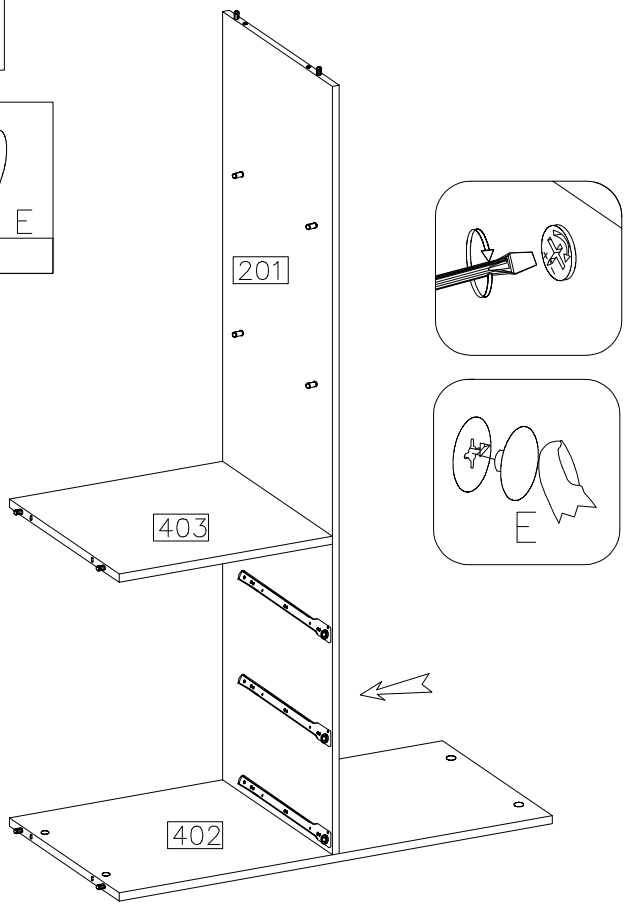

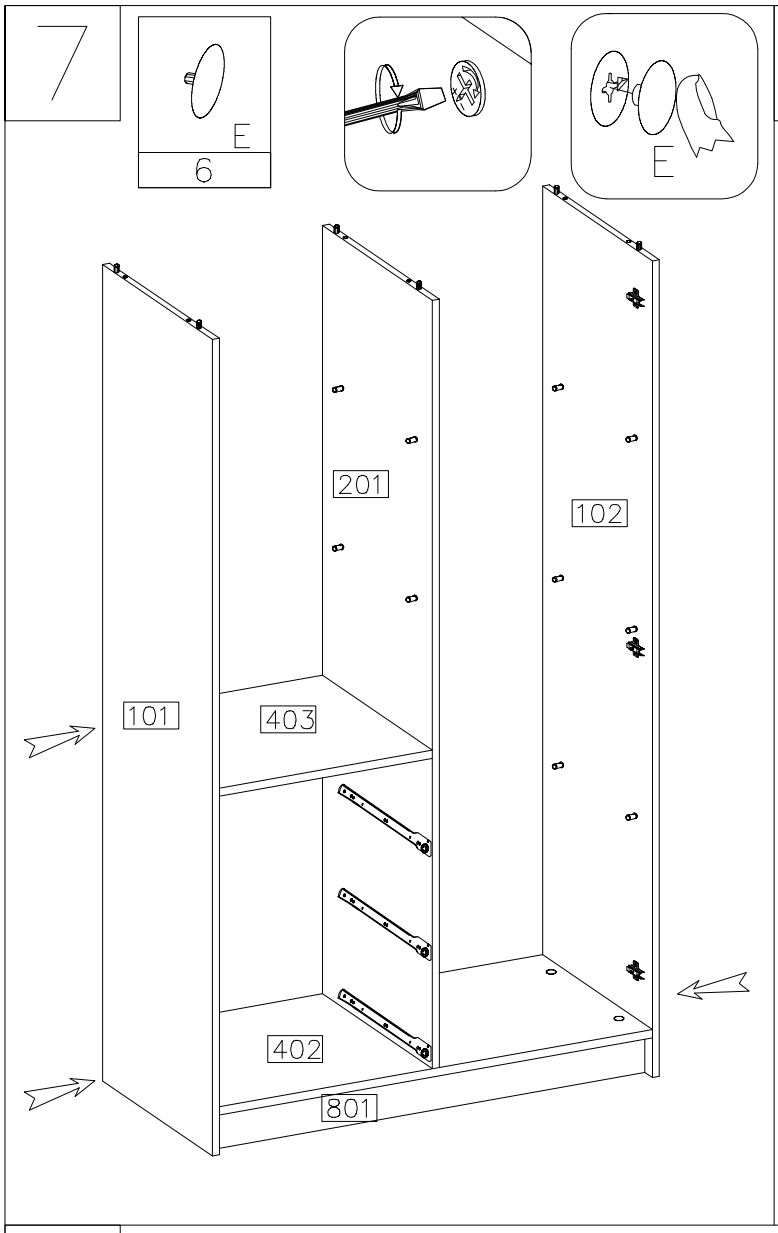
7
E
6
E
201
102
101
403
402
801

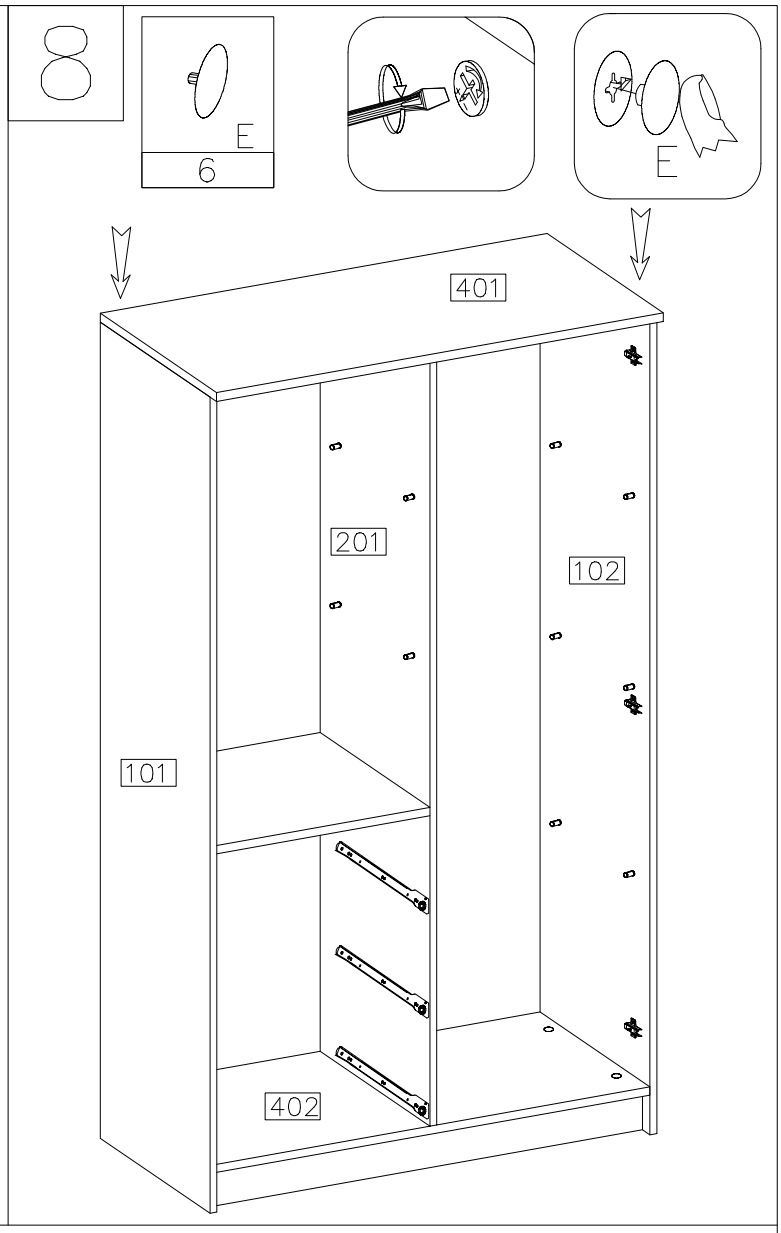
8
E
6
E
401
201
102
101
402

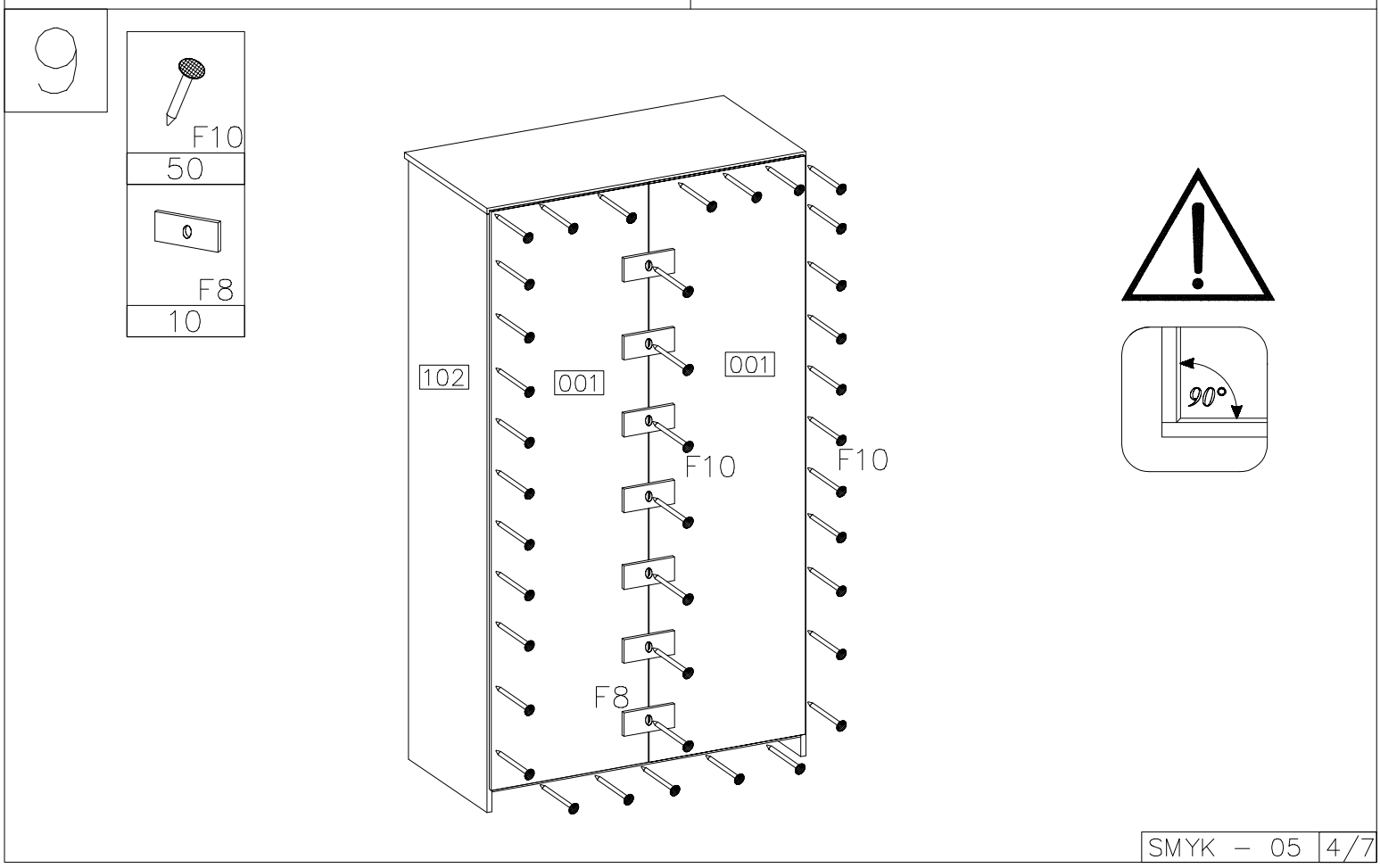
9
F10
50
F8
10
102
001
001
F10
F10
F8
90°

## 10

| | ø8x30mm |
|---|---|
| 011 | A |
| 1 | 24 |

3x

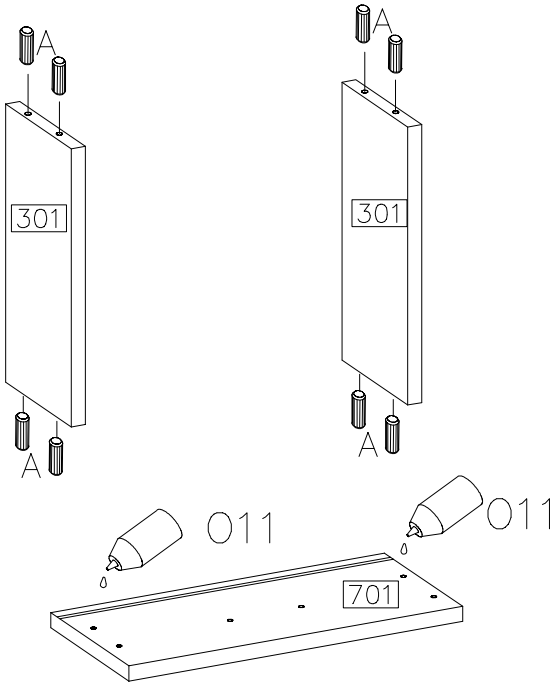


## 11

| |
|---|
| F10 |
| 30 |
| 011 |
| 1 |

3x

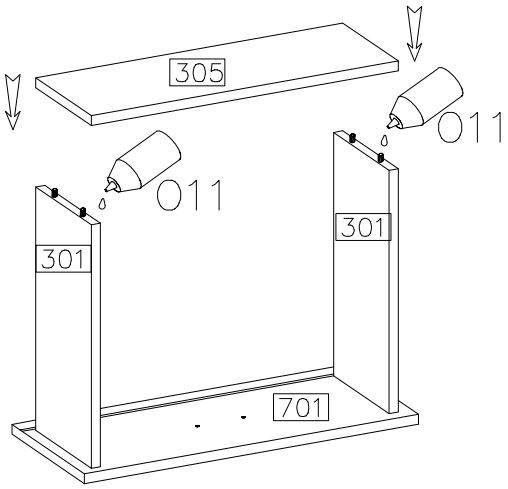


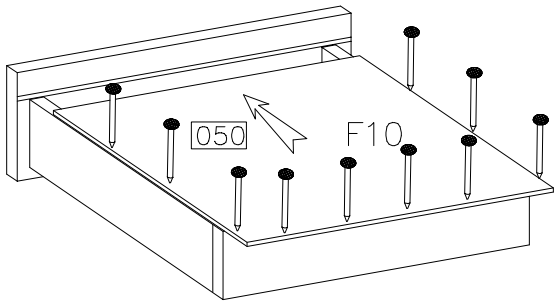


## 12

| 4.0x42mm | |
|---|---|
| R2 | 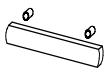 S1 |
| 6 | 3 |

3x

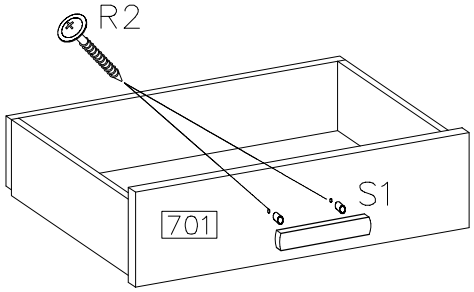


## 13

| L=350 | ø4.0x16mm |
|---|---|
| PR | P1 |
| 3KPL | 12 |

3x

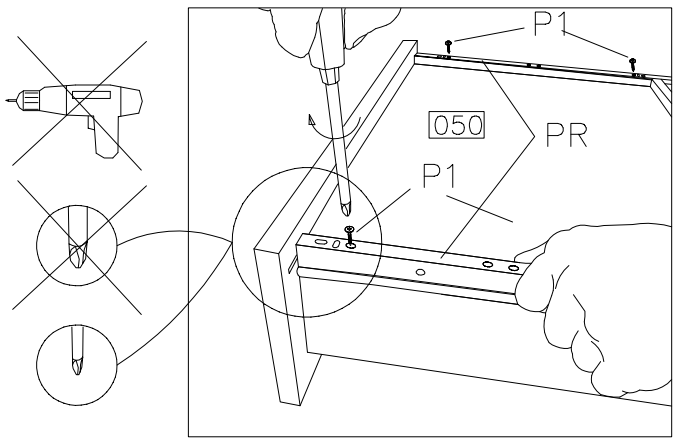

14

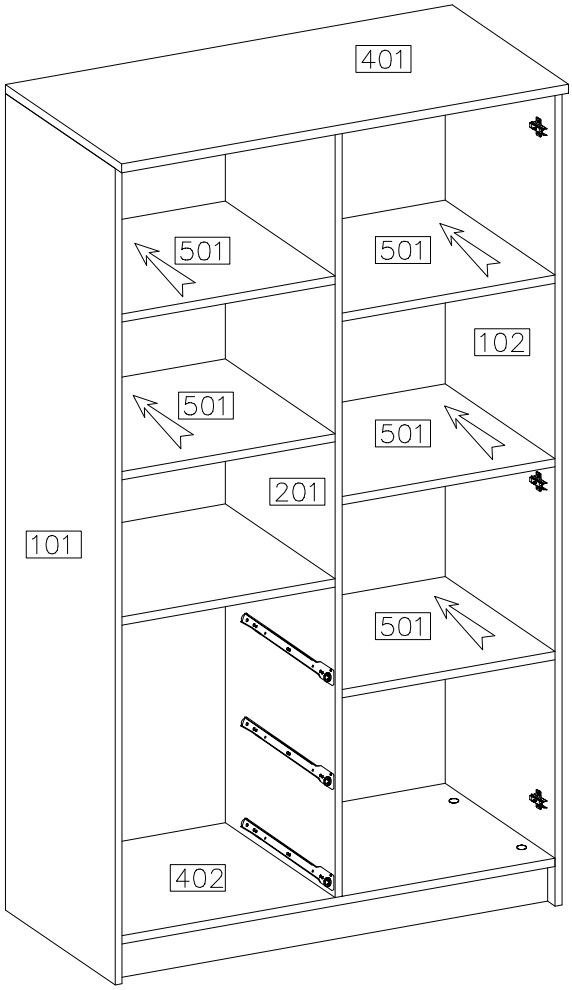


15

| ø4.0x16mm | ø35/KR-0 |
|---|---|
| P1 | G6 |
| 6 | 3 |
| 4.0x42mm | |
| R2 | S1 |
| 2 | 1 |

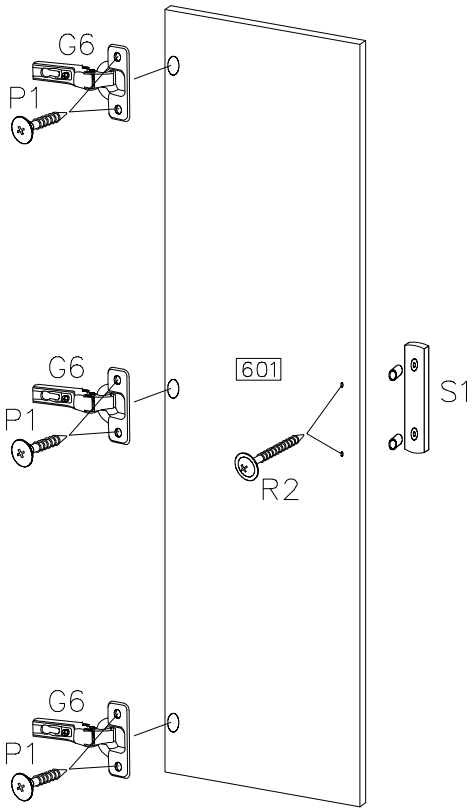

16

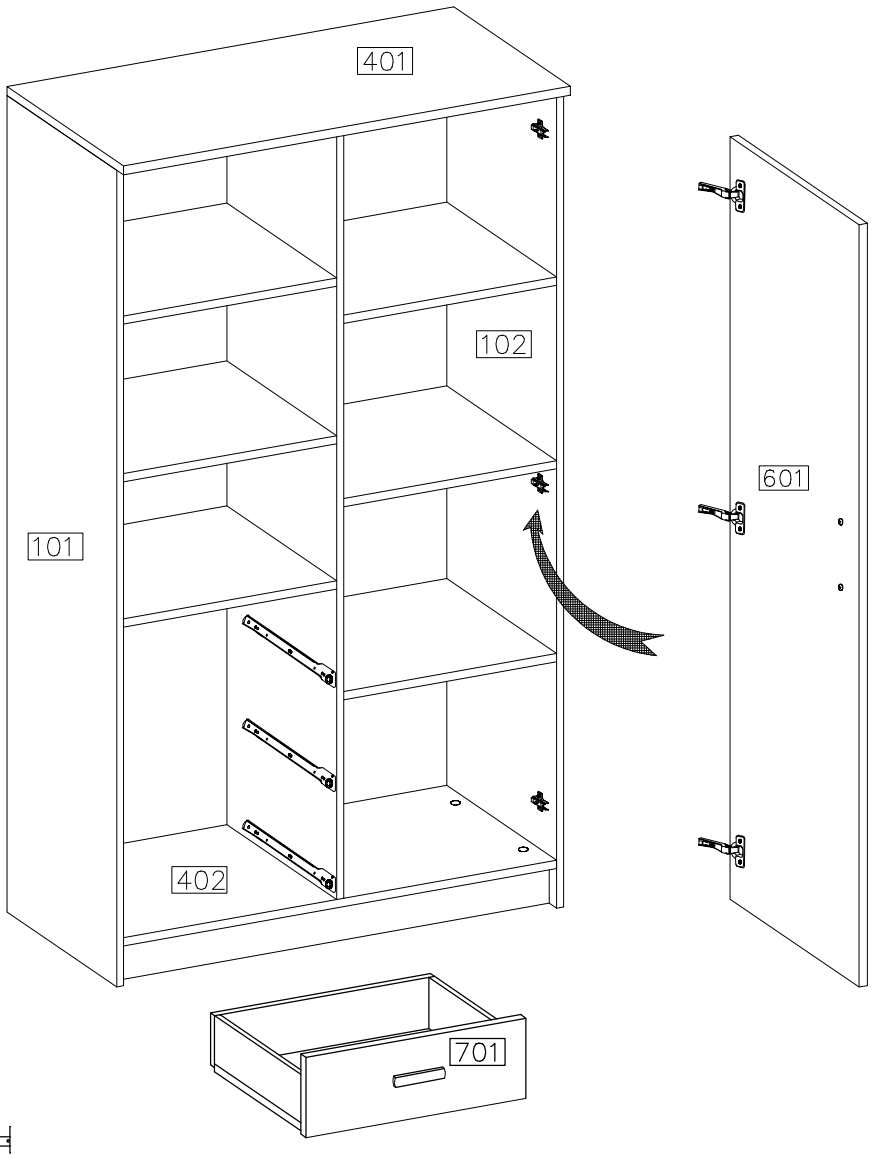


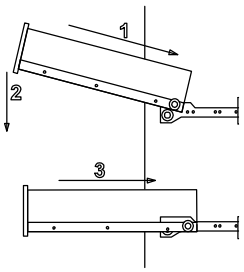

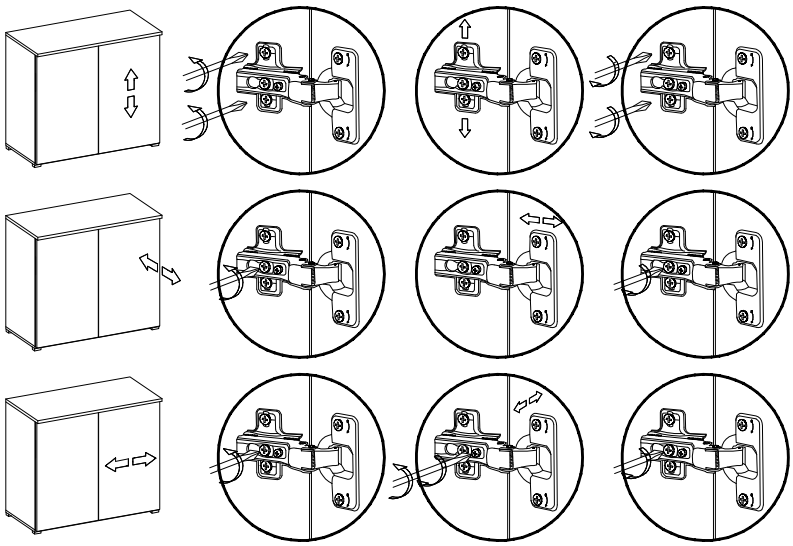
17